SPINDLE CLAMPING SYSTEM

ROHM PULL STUD TYPE CLAMPING 四瓣爪 ROHM PULL STUD TYPE CLAMPING

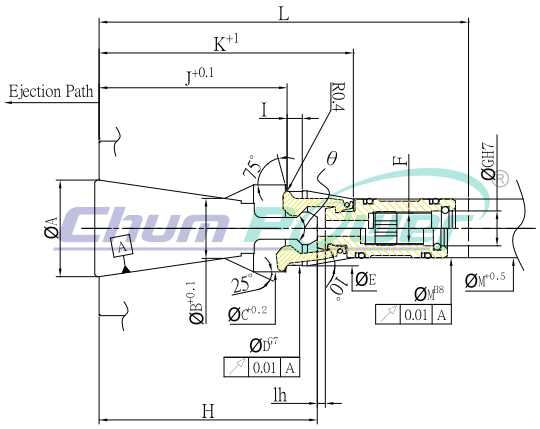

Code No. 型號	Spec. BT X° 規格	θ	A	B	C	D	E	F	G	H	I	J	K	L	M	lh	ejection path 頂出量
90201	BT30-45°	45°															
90202	BT30-60°	60°	31.75	19.5	24.5	19.5	20	M10×1.25P	12	71.4	6	63.5	80	135	19	4.5	0.5
90203	BT30-90°	90°															
90204	BT40-45°	45°															
90205	BT40-60°	60°	44.45	27.6	40	34	34.5	M14×1.5P	16	100.4	7	86.5	117	170	27	4.5	1.0
90206	BT40-90°	90°															
90207	BT50-45°	45°															
90208	BT50-60°	60°	69.85	43	56	49	49.5	M16×1.5P	20	147.4	8	126.5	163	230	40	4.8	1.0
90209	BT50-90°	90°															

Code No. 型號	Spec. BT X° 規格	θ	A	B	C	D	E	F	G	H	I	J	K	L	M	lh	ejection path 頂出量
90210	CAT30		31.75	19.5	24.5	19.5	20	-	12	-	6	63.5	80	125	19	-	-
90211	CAT40	90°	44.45	27.6	40	34	34.5	M14×1.5P	16	83.6	7	79.5	117	180	27	5	1.0
90212	CAT50		69.85	43	56	49	49.5	M16×1.5P	20	126	8	126.5	163	230	40	6	1.0

Code No. 型號	Spec. BT X° 規格	θ	A	B	C	D	E	F	G	H	I	J	K	L	M	lh	ejection path 頂出量
90213	DIN30		31.75	19.5	24.5	19.5	20	M10×1.25P	12	71.3	6	63.5	80	135	19	3.6	0.5
90214	DIN40	150°	44.45	27.6	40	35	34.5	M14×1.5P	16	98.2	7	86.5	117	170	27	3.8	1.0
90215	DIN50		69.85	43	53	49	49.5	M16×1.5P	20	136.6	8	126.5	163	230	40	4.8	1.0